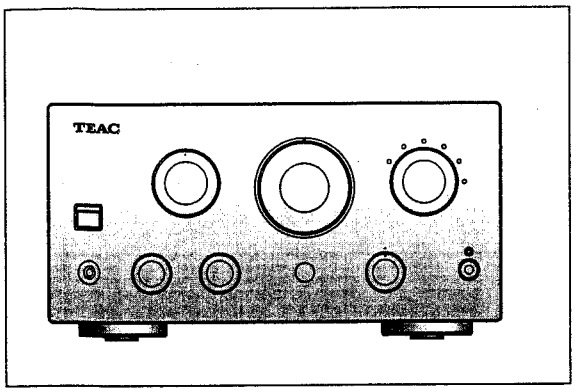

TEAC

SERVICE MANUAL

A-H300

Integrated Stereo Amplifier

NOTES

- PC boards shown are viewed from parts side.
- The parts with no reference number or no parts number in the exploded views are not supplied.
- As regards the resistors and capacitors, refer to the circuit diagrams contained in this manual.
- ⚠ Parts marked with this sign are safety critical components.
  They must be replaced with identical components- refer to the appropriate parts list and ensure exact replacement.
- Parts of [ ] mark can be used only with the version designated.
  [E]: EUROPE

9A0681000

CONTENTS

SPECIFICATIONS 2
IC Function (μ-com BVIANAM1224A) 3
IC BLOCK DIAGRAM 4
WIRING DIAGRAM 5
BLOCK DIAGRAM 7
SCHEMATIC DIAGRAM 15
PRINTED CIRCUIT BOARDS 17
EXPLODED VIEW 21
ELECTRICAL PARTS LIST 24

Specifications

Power output	: 35W + 35W (80 Ω, 1kHz, 0.1%)
Total harmonic distortion	: 0.05% (30W, 1kHz, 8 Ω)
S/N Ratio (Input Short)	
Phono	: 70dB (IHF-A)
CD, Tuner, Aux, Tape	: 95dB (IHF-A)
CD direct	: 95dB (IHF-A)
Input Sensitivity/ Impedance	
Phono(MM)	: 2.6mV/10k Ω
CD, Tuner, Aux, Tape	: 180mV/10k Ω
Maximun Input level	
Phono	: 100mV
CD, Tuner, Aux, Tape	: 8V
Channel Separation(Input Short)	: 70dB (1kHz, 1W, D.B.F)
Residual noise	: 0.9mV
Frequency response	: 5Hz to 80kHz
Tone control	
Bass	: ±10dB (100Hz)
Treble	: ±10dB (10kHz)
Required speaker impedance	: 8 Ω to 16 Ω
Power consumption	: 85W [EUR]
Power requiremnts	: AC 230V, 50Hz [EUR]
Dimensions (W×H×D)	: 215×110×305mm
Weight(net)	: 4.2kg

Standard accessories

Remote control unit	: 1
Operator's manual	: 1

* Improvements may result in specification or feature changes without notice.

IC FUNCTION (MI-COM BVIANAM 1224A)

Pin No.	PIN NAME	I/O	DESCRIPTION
1	FUNC MUTE	O	Function, Mute ON/OFF Output
2	-20dB MUTE	O	-20dB Mute ON/OFF Output
3	POWER MUTE	O	Power Mute Output
4	SOURCE REC, OUT	O	Source recoding Output
5	OPTION	I	Option port "HIGH" LEVEL
6	OPTION	I	
7	PROTECT IN	I	Protect Input
8	STBY	O	Stand by LED ON/OFF Output
9	POWER ON/OFF	O	Power ON/OFF Output
10	AUX	O	Function LED ON/OFF Output
11	PHONO	O	Function LED ON/OFF Output
12	N/C		Non connection
13	TUNER		
14	CD	O	Function LED ON/OFF Output
15	TAPE 1		
16	TAPE 2/MD		
17	Vss	I	GROUND
18, 19	N/C	I	Non connection
20	RESET	I	Divice reset pluse input
21	XL 1	O	Crystal element connection terminal
22	XL 2	I	
23	TAPE 2 → 1	O	TAPE1,2 Recording Output
24	TAPE 2 → 1		
25, 26	KEY OUT	O	Key mqtrix singal IN/OUT PORT
27, 28	KEY IN	I	
29	TAPE2 REC IN	I	TAPE2,1 Recording Input
30	TAPE1 REC IN	I	
31	SOURCE REC, OUT	O	Source recoding Output
32, 34	N/C		Non connection
33	FUNC DOWN	I	Function UP/DOWN Input
35	FUNC UP	I	
36	BUS IN	I	System control simgal Input
37	REMOTE IN	I	Remote control simgal Input
38	N/C		Non connection
39	VDD	I	+5V
40	BUS OUT	O	System control singal Output
41	N/C		Non connection
42	VR UP	O	Volum UP/DOWN Output
43	VR DOWN	O	
44	CD DIRECT	O	CD Direct led ON/OFF Output

IC BLOCK DIAGRAM

LC4966BH

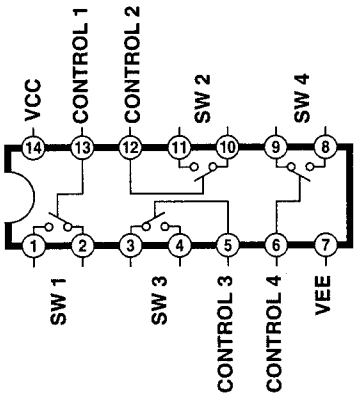

TO-92L

1. Emitter
2. Collector
3. Base

KSA1175Y KSAC2785Y
KSD1021Y KSR2206
KSR1206
KSR1210

TO-92

1. Emitter
2. Collector
3. Base

KTC2878BT

TO-92

1. Drain
2. Gate
3. Source

KTK117Y

TO-92L

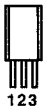

1. Emitter
2. Collector
3. Base

KSA916Y
KSC2316Y

TO-220

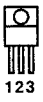

1. Base
2. Collector
3. Emitter

2SD1585L

TO-220

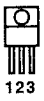

1. INPUT
2. GND
3. OUTPUT

MC7805C

TO-3P

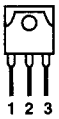

1. Base
2. Collector
3. Emitter

2SD9980 2SB7780

WIRING DIAGRAM

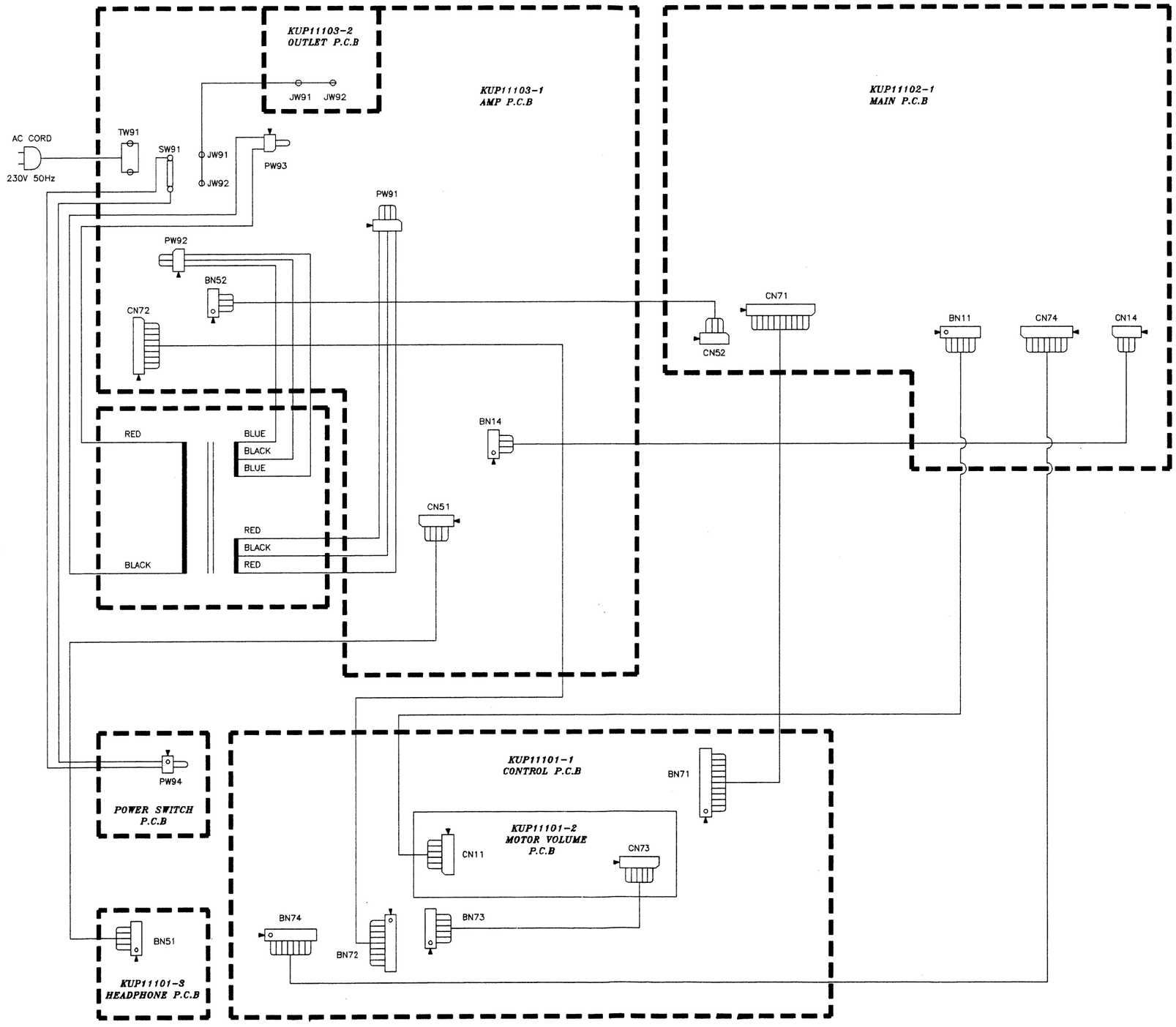

BLOCK DIAGRAM

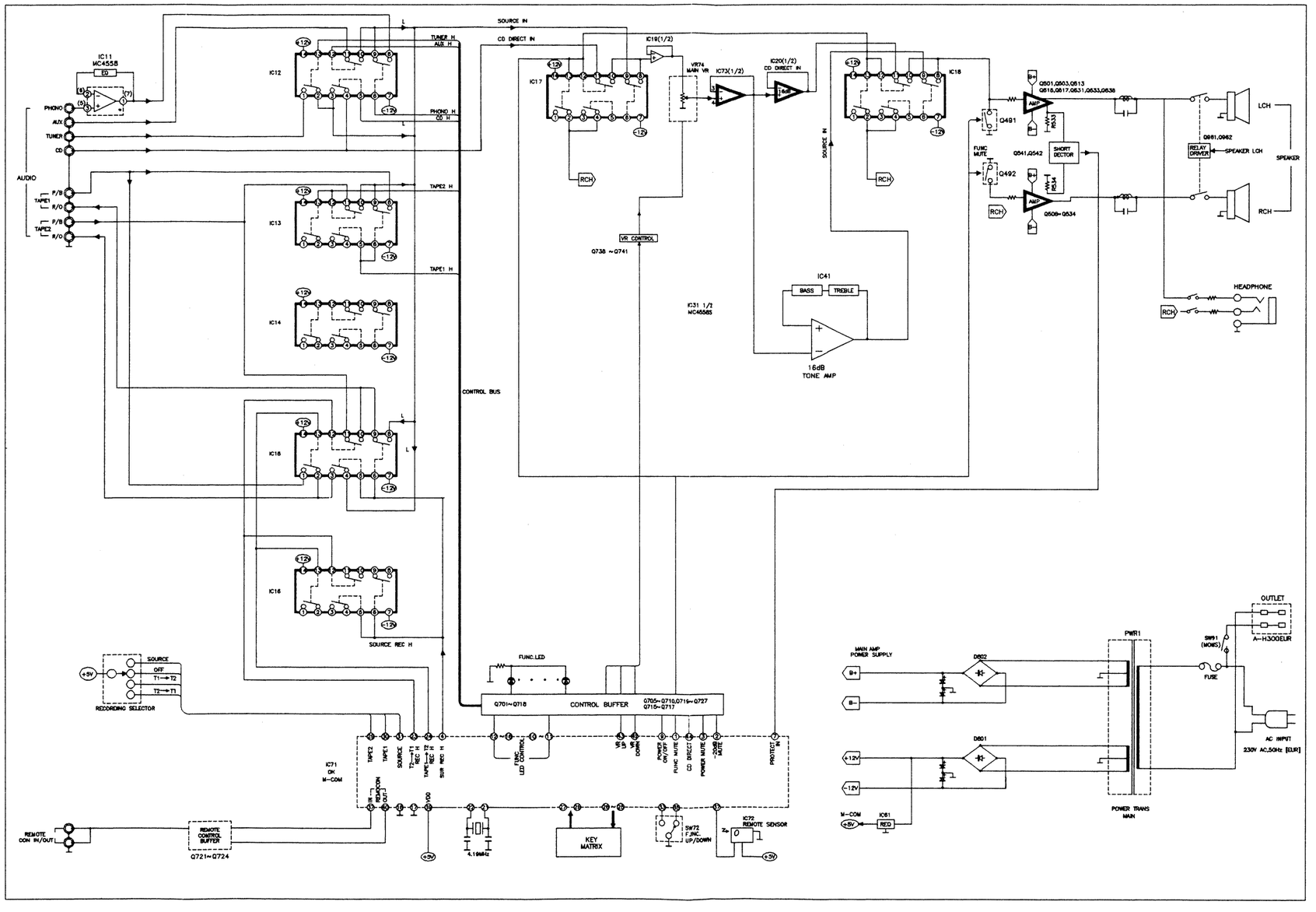

SCHEMATIC DIAGRAM

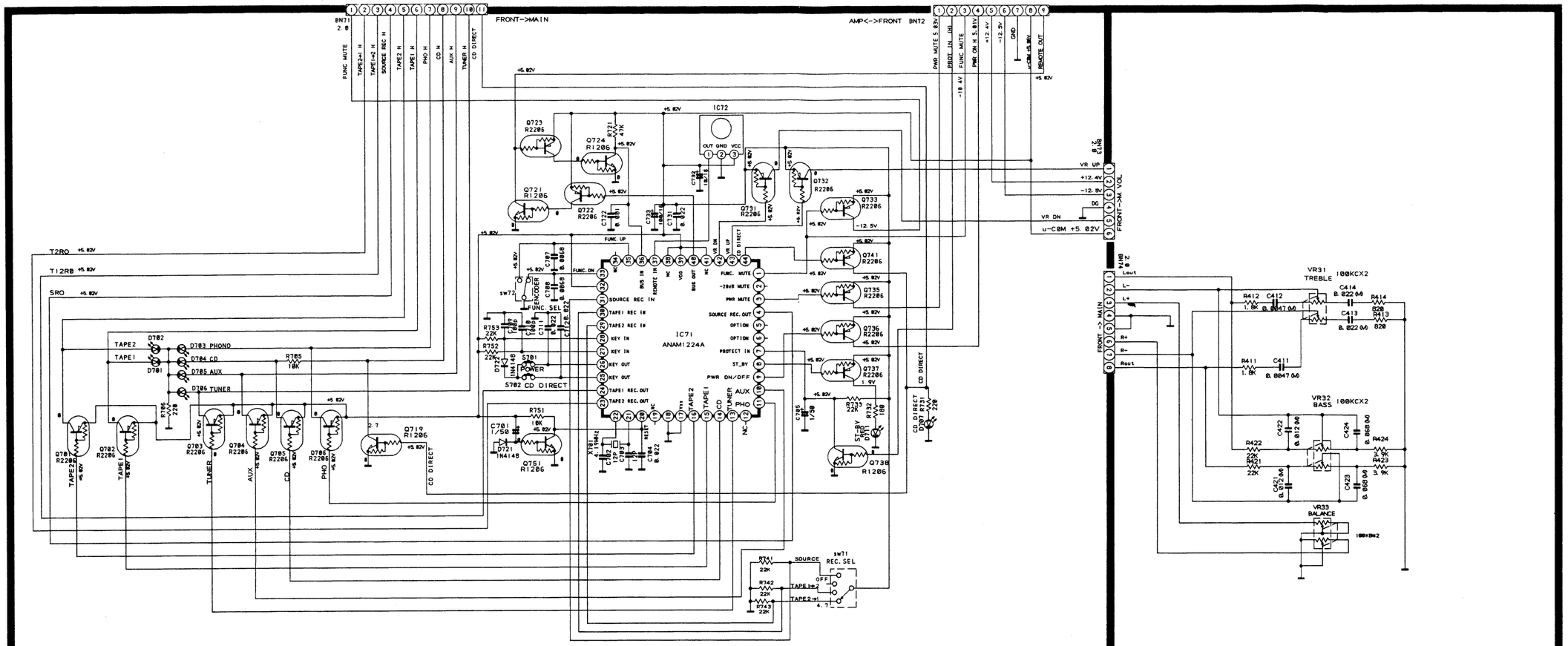

* IMPORTANT SAEFTY NOTICE :

COMPONENTS IDENTIFIED BY ⚠ MARK HAVE SPECIAL CHARACTERISTICS. IMPORTANT FOR SAFETY. WHEN REPLACING ANY OF THESE COMPONENTS USE ONLY MANUFACTURER'S SPECIFIED PART.

* THE UNIT OF RESISTANCE IS OHM, K=1000 OHM, M=1000 KOHM.
* THE CAPACITANCE IS MICROFARAD P=PICO FARAD
* THIS SCHEMATIC DIAGRAM MAY BE MODIFYED AT ANY TIME WITH THE IMPROVEMENT OF PERFORMANCE.
* ALL VOLTAGE ARE MEASURED WITH GROUND.
  DC:VALUES WITH NO SINGAL
  AC:RMS

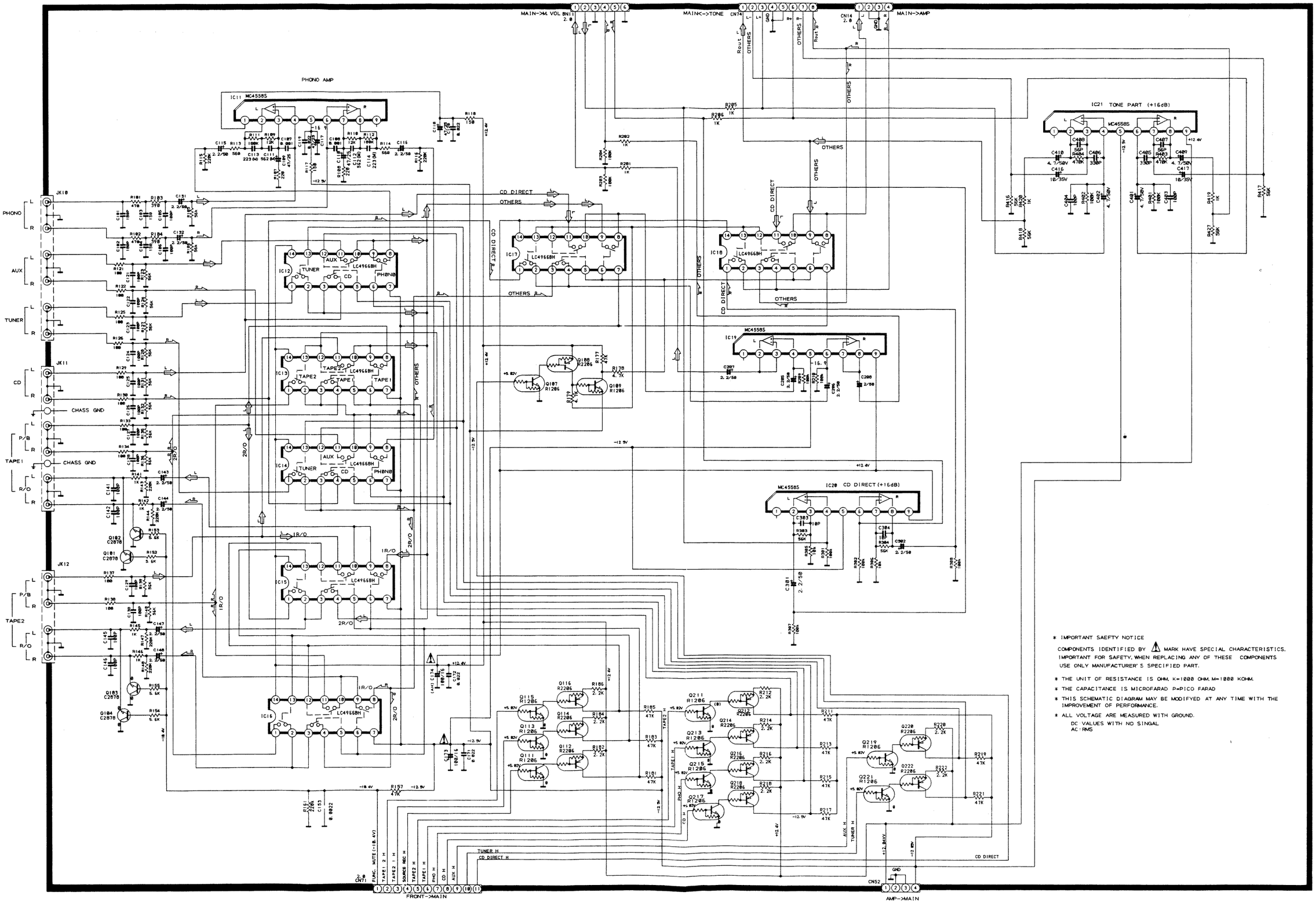

* IMPORTANT SAEFTY NOTICE

COMPONENTS IDENTIFIED BY ⚠ MARK HAVE SPECIAL CHARACTERISTICS. IMPORTANT FOR SAFETY. WHEN REPLACING ANY OF THESE COMPONENTS USE ONLY MANUFACTURER'S SPECIFIED PART.

* THE UNIT OF RESISTANCE IS OHM, K=1000 OHM, M=1000 KOHM.

* THE CAPACITANCE IS MICROFARAD P=PICO FARAD

* THIS SCHEMATIC DIAGRAM MAY BE MODIFYED AT ANY TIME WITH THE IMPROVEMENT OF PERFORMANCE.

* ALL VOLTAGE ARE MEASURED WITH GROUND.
DC VALUES WITH NO SINGAL
AC:RMS

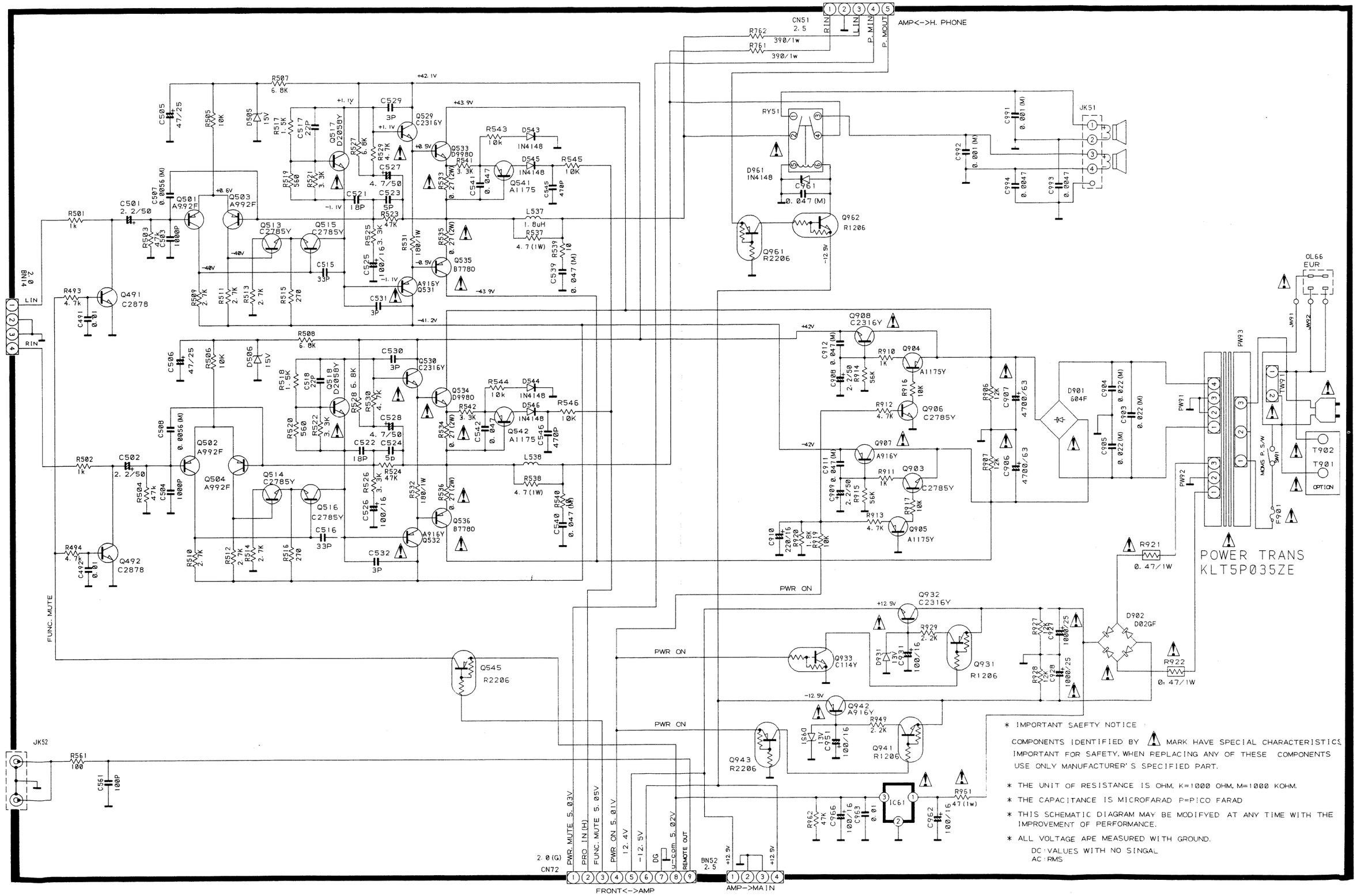

* IMPORTANT SAEFTY NOTICE :

COMPONENTS IDENTIFIED BY ⚠ MARK HAVE SPECIAL CHARACTERISTICS IMPORTANT FOR SAFETY. WHEN REPLACING ANY OF THESE COMPONENTS USE ONLY MANUFACTURER'S SPECIFIED PART.

* THE UNIT OF RESISTANCE IS OHM. K=1000 OHM. M=1000 KOHM.

* THE CAPACITANCE IS MICROFARAD P=PICO FARAD

* THIS SCHEMATIC DIAGRAM MAY BE MODIFYED AT ANY TIME WITH THE IMPROVEMENT OF PERFORMANCE.

* ALL VOLTAGE APE MEASURED WITH GROUND.

DC : VALUES WITH NO SINGAL
AC : RMS

REMOTECONTROL SCHEMATIC DIAGRAM

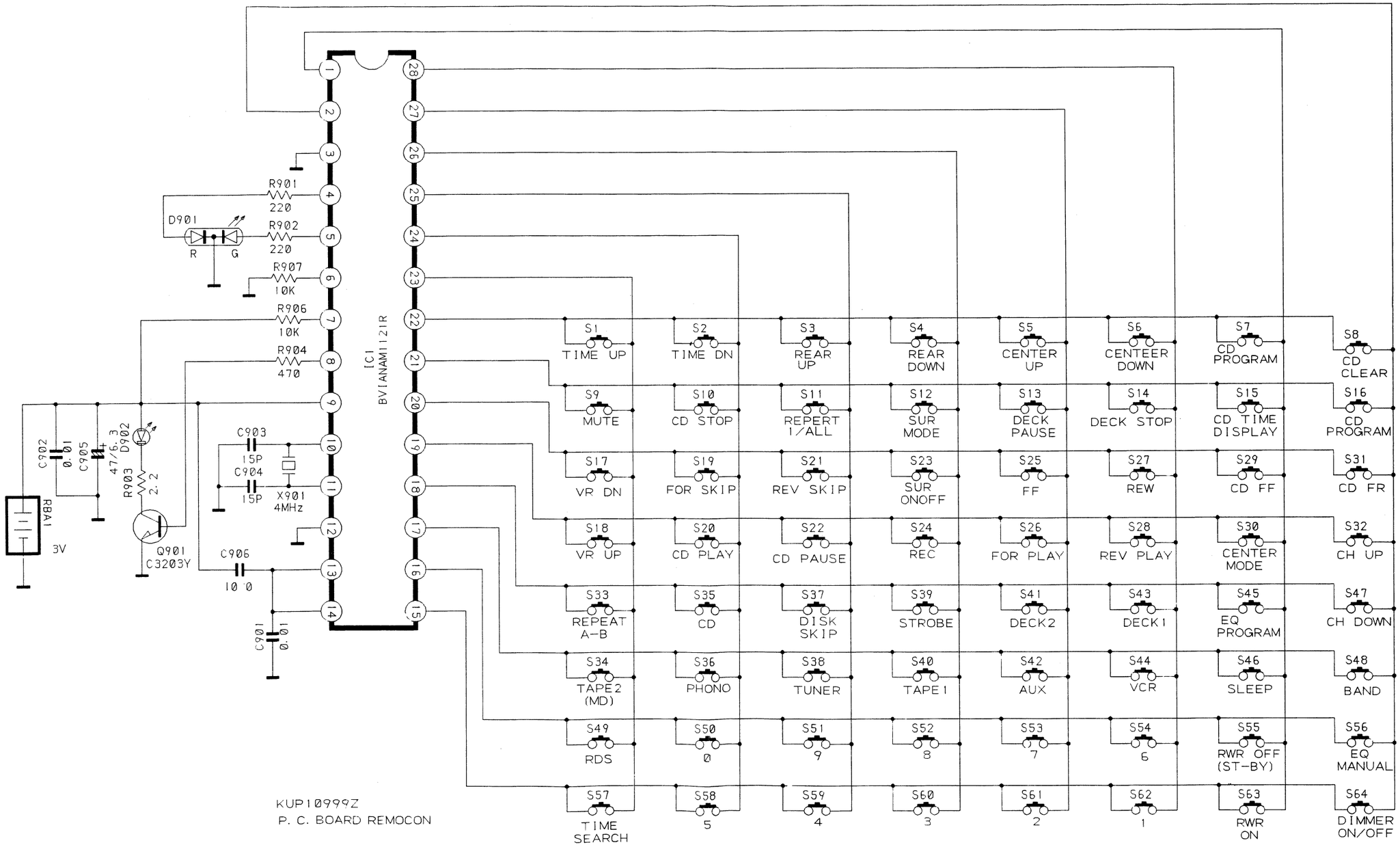

PRINTED CIRCUIT BOARDS

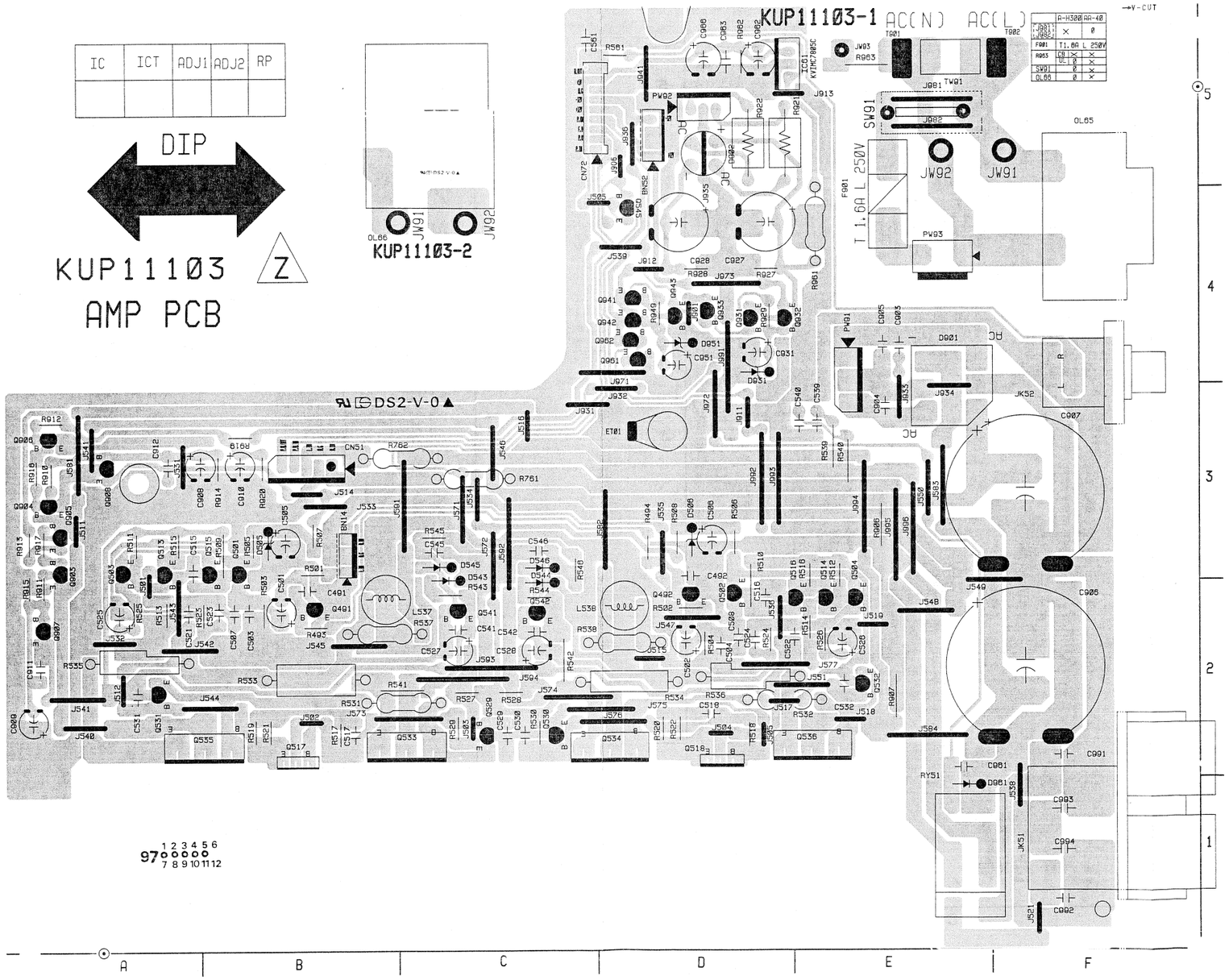

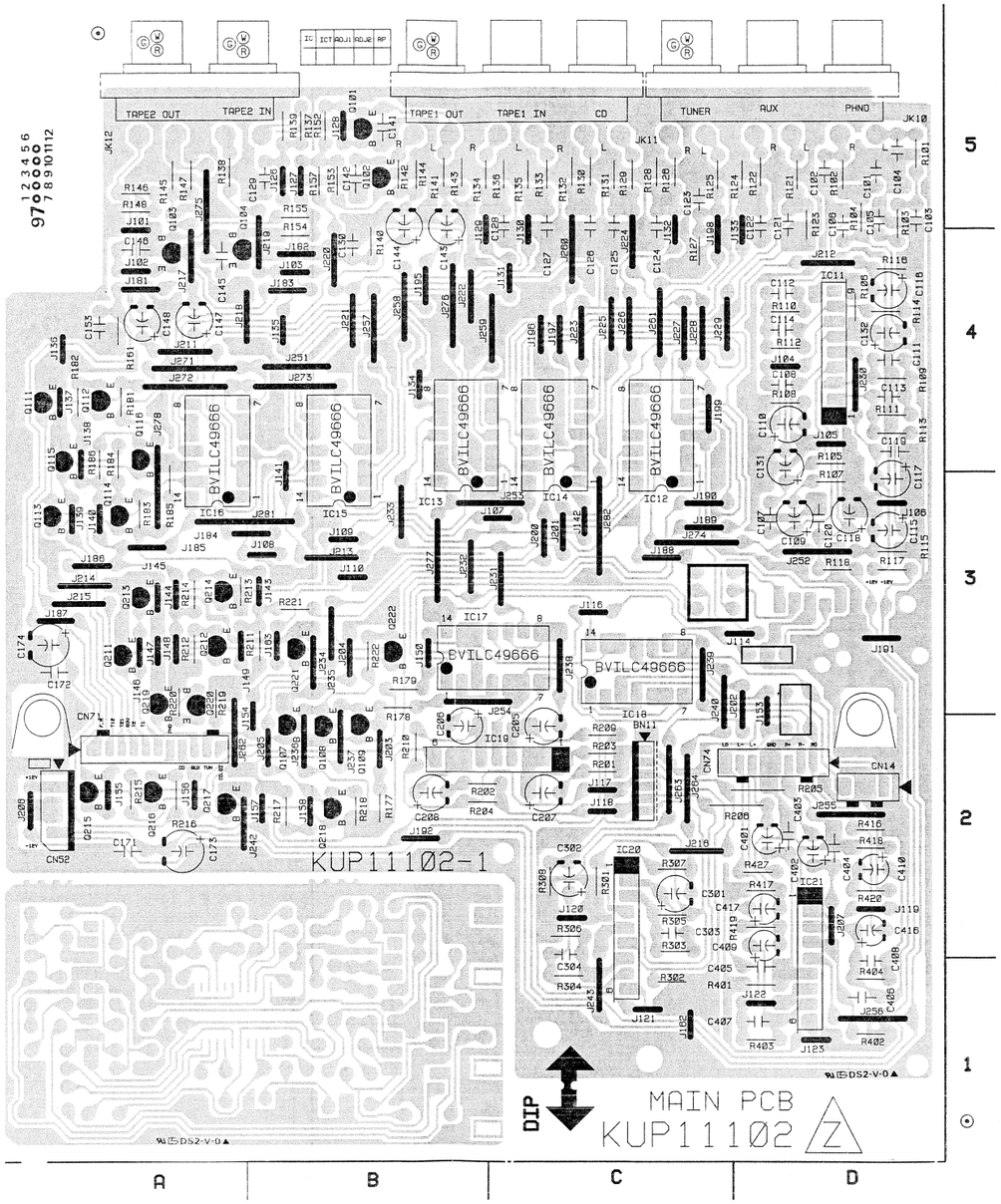
MAIN PCB
KUP11102
DIP
KUP11102-1
TAPE2 OUT
TAPE2 IN
TAPE1 OUT
TAPE1 IN
CD
TUNER
AUX
PHNO
BVILC49666

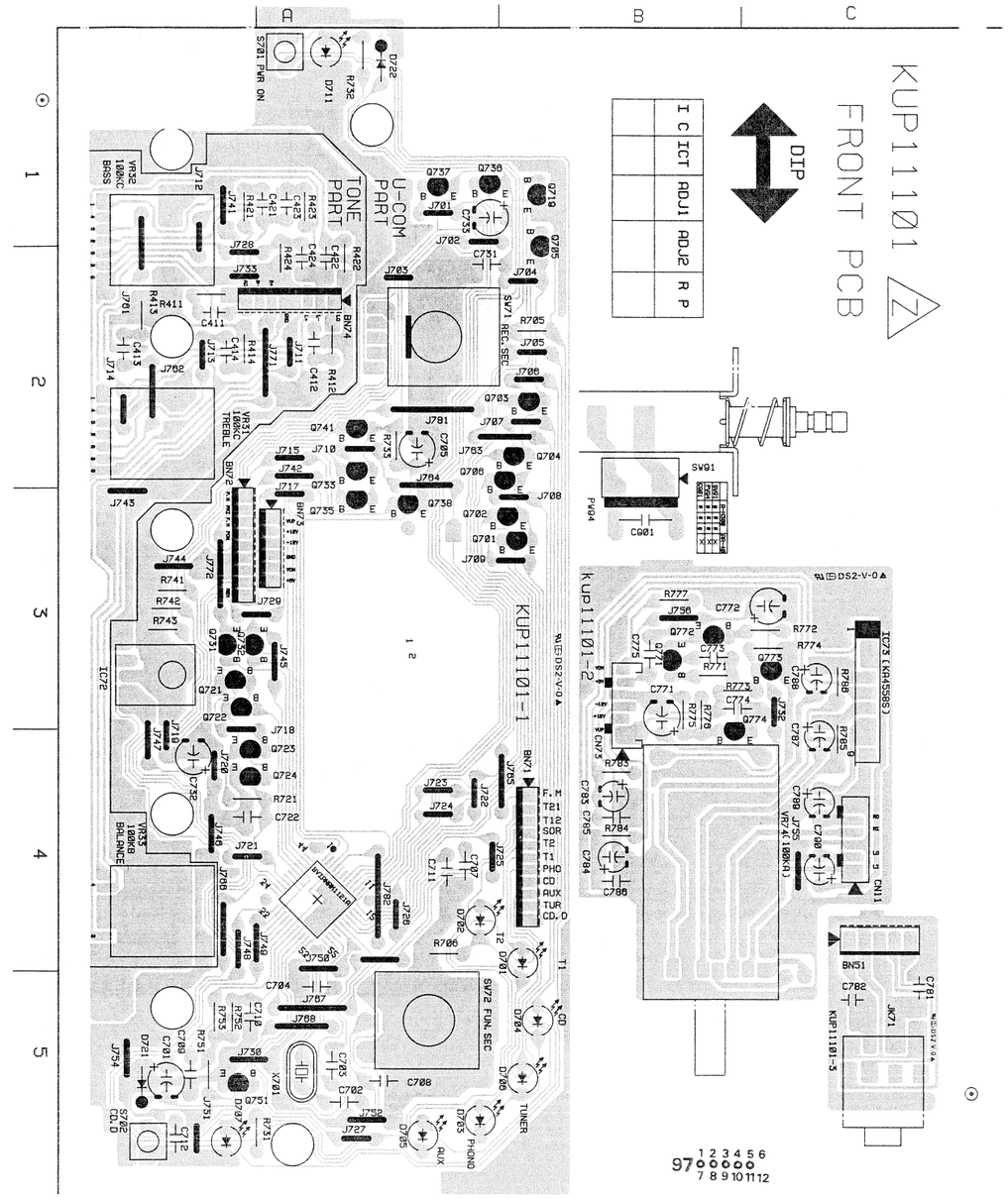
KUP11101
FRONT PCB
DIP
I C
ICT
ADJ1
ADJ2
R P
U-COM PART
TONE PART
KUP11101-1
KUP11101-2
KUP11101-3

EXPLODED VIEW

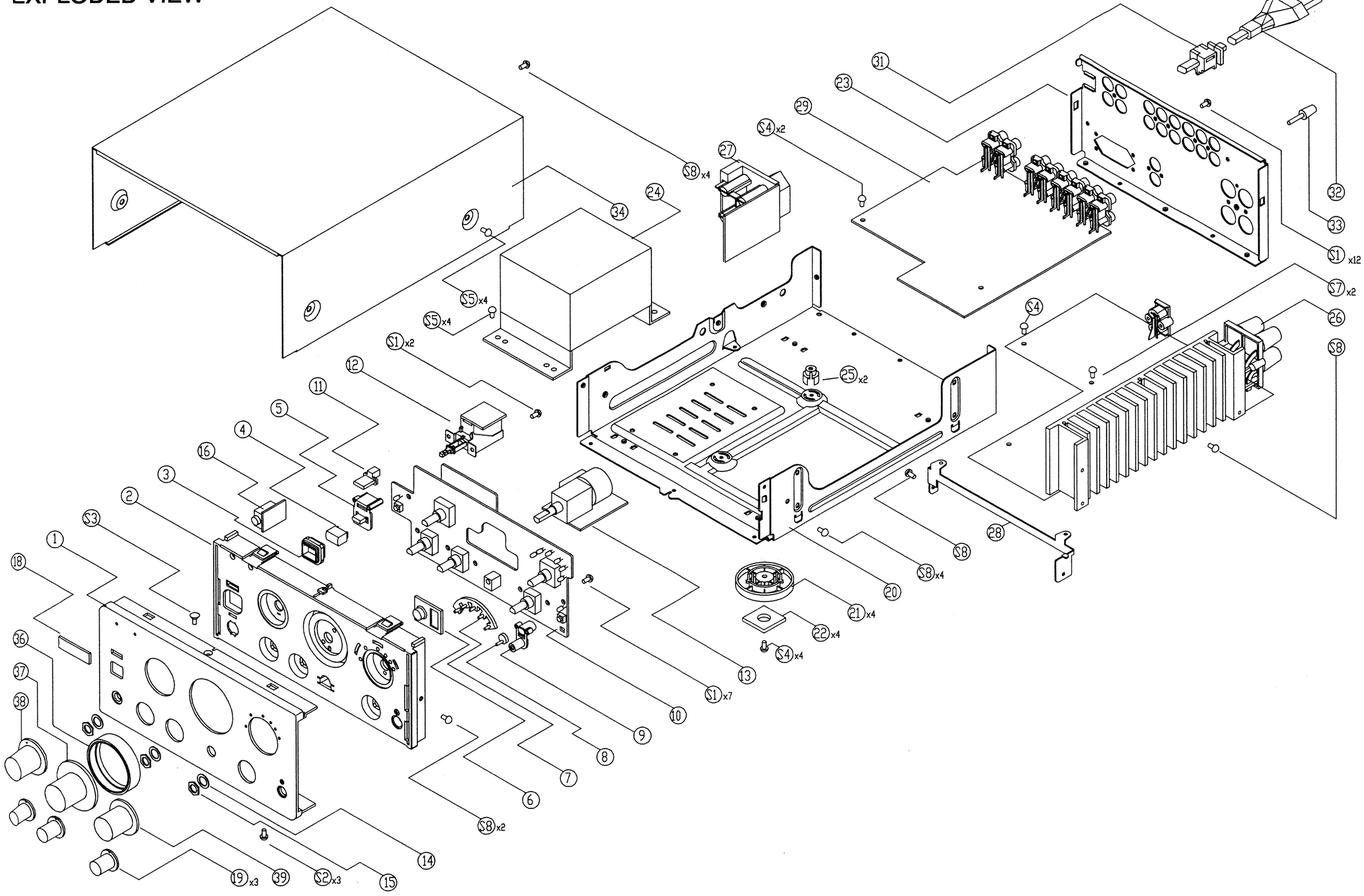

EXPLODED VIEW PARTS LIST

Ref. No.	Part No.	Description	Remarks
1	9A06864500	PANEL, FRONT	
2	9A06830500	FRNT, PANEL	
3	9A06863300	INDICATOR, STANDBY	
4	9A06862700	KNOB, STANDBY	
5	9A06862500	KNOB, STANDBY	
6	9A06863500	WINDOW, SENSOR	
7	9A06863400	INDICATOR, FUNCTION	
8	9A06227400	INDICATOR, POWER	
9	9A06862600	KNOB, DIRECT	
10	9A06864900	FRONT PCB ASS'Y	
11	9A06862300	KNOB, POWER	
12		PUSH SWITCH ASS'Y	
13		MOTOR VOLUME	
14		WASHER	
15		NUT	
16		PHONE JACK PCB ASS'Y	
17		LOCKING SUPPORT	
18	9A06224200	BADGE, TEAC	
19	9A06862400	KNOB, ROTARY	
20	9A06866100	BOTTOM CHASSIS ASS'Y	
21	9A06864400	FOOT	
22	9A05837300	FOOT CUSHION	
23	9A06864300	PANEL, REAR	
24		TRANS	
25	9A01375500	PCB HOLDER	
26	9A06865100	AMP PCB ASS'Y	
27		AC OUTLET PCB ASS'Y	
28	9A06864600	BRACKET, PCB	
29	9A06865000	MAIN PCB ASS'Y	
31	9A06754900	BUSHING, AC CORD	
32	9A05328100	CORD, POWER	
33	9A05917200	GROUND TERMINAL	
34	9A06864200	CABINET, TOP	
36	9A06697200	HOUSING, VOLUME A4-96-2578	
37	9A06677700	VOLUME CAP ASS'Y (A)	
38	9A06228800	VOLUME CAP ASS'Y	
39	9A06228300	VOLUME CAP ASS'Y (B)	
S1	9A01377400	SCREW, KTB3+10G	
S2		SCREW KTS3+6J	
S3	9A06866000	SCREW KTS3+8G	
S4	9A05339200	SCREW KTW3+8J	
S5	9A05338800	SCREW KTB4+6F	
S7	9A05339100	SCREW KTW3+12J	
S8	9A01535800	SCREW, KTB3+8J	

ELECTRICAL PARTS LIST

Ref. No.	Part No.	Description
	9A06864900	FRONT PCB ASS'Y
	9A06866300	PCB, FRONT
BN51	9A06866800	WIRE ASS'Y
BN71	9A06867000	WIRE ASS'Y
BN72	9A06867100	WIRE ASS'Y
BN73	9A06867200	WIRE ASS'Y
BN74	9A06867300	WIRE ASS'Y
CN11	9A05329700	WAFER MOLEX53014-0610
CN73	9A05329800	WAFER GS, 2M/M, 6P
C411, C412	9A06696100	CQ, 0.0047UF J 50V
C413, C414	9A06695900	CQ, 0.022UF J 50V
C421, C422	9A06695700	CQ, 0.012UF J 50V
C423, C424	9A06861700	CAP, MYLAR 1H683JZ3
C732	9A06787400	CE, 10UF K 16V DC
C733	9A06693400	CAP, ELECT KCEA1CKS101T
C783, C784	9A06693600	CE, 47UF H 25V DC
C901	9A06692300	CC, 4700PF M F 25V
D721, D722	9A01390500	DIODE, 1N4148MT
IC71	9A06862000	I.C ANAM 1224A
IC72	9A06757900	IC, PNA4612M00HB
IC73	9A05195800	IC, MC4558S
JK71	9A06861800	JACK, HEADPHONE
Q701, Q706	9A03745200	TR, KSR2206TA
Q719	9A05196900	TR, KSR1206TA
Q721. Q724	9A05196900	TR, KSR1206TA
Q732, Q733	9A03745200	TR, KSR2206TA
Q735~Q738		
Q741	9A03745200	TR, KSR2206TA
Q751	9A05196900	TR, KSR1206TA
Q771, Q772	9A03747300	TR, KSB811-YTA
Q773, Q774	9A03811700	TR, KSD1021-YTA
PW94	9A06867400	WIRE ASS'Y
SW71	9A06326800	SW, ROTARY SRBV14065A
SW72	9A06224700	VR, ENCODOR EC16B1210
SW91	9A06784700	SW, PUSH (MOMS)
VR31, VR32	9A06862100	RES, VARIABLE 01C104Y
VR33	9A06673100	RES, VARIABLE 03B104Y
VR74	9A06862200	VOLUME, MOTOR
X701	9A05192900	CRYSTAL, DC-D1800
	9A05328100	CORD, POWER
	9A06830300	TRANS POWER
	9A06865000	MAIN PCB ASS'Y
BN11	9A06866600	WIRE ASS'Y
CN14	9A05356300	WAFER 04GA 19ZM
CN52	9A05329300	WAFER MOLEX 5267-04A
CN71	9A05330900	WAFER MOLEX-53014
CN74	9A05330300	WAFER MOLEX53014-0810

Ref. No.	Part No.	Description
C111, C112	9A06696300	CQ, 0.0056UF J 50V
C113, C114	9A06695900	CQ, 0.022UF J 50V
C117, C118	9A06693600	CE, 47UF H 25V DC
IC11	9A05195800	IC, MC4558S
IC12~IC18	9A05971200	IC., LC4966
IC19~IC21	9A05195800	IC, MC4558S
JK10	9A06674900	JACK, BOARD 4R014Z
JK11	9A06864100	TERMINAL, IN/OUT(G)
JK12	9A06675000	JACK, BOARD 4R019Z
Q101~Q104	9A05896000	TR., KTC2878B
Q107, Q109	9A05196900	TR, KSR1206TA
Q111, Q113	9A05196900	TR, KSR1206TA
Q115, Q211	9A05196900	TR, KSR1206TA
Q123, Q215	9A05196900	TR, KSR1206TA
Q217, Q219	9A05196900	TR, KSR1206TA
Q221	9A05196900	TR, KSR1206TA
Q108, Q112	9A03745200	TR, KSR2206TA
Q114, Q116	9A03745200	TR, KSR2206TA
Q212, Q214	9A03745200	TR, KSR2206TA
Q216, Q218	9A03745200	TR, KSR2206TA
Q220, Q222	9A03745200	TR, KSR2206TA
	9A06865100	AMP PCB ASS'Y
	9A06866500	PCB, AMP
BN14	9A06866700	WIRE ASS'Y
BN52	9A06866900	WIRE ASS'Y
CN51	9A05894700	WAFER (5P)
CN72	9A05330500	WAFER KJP09GA47ZG
C501, C502	9A06694200	CE, 2.2UF H 50V DC
C505, C506	9A06693600	CE, 47UF H 25V DC
C525, C526	9A06693200	CE, 100UF H 16V DC
C527, C528	9A06694500	CE, 4.7UF H 50V DC
C539, C540	9A06696200	CQ, 0.047UF J 50V
C903, C905	9A06695900	CQ, 0.022UF J 50V
C906, C907	9A06862900	CAP, ELECT TSMK63V472
C908, C909	9A06694200	CE, 2.2UF H 50V DC
C910	9A06693300	CE, 220UF H 16V DC
C911, C912	9A06696100	CQ, 0.0047UF J 50V
C927, C928	9A06226700	CE, 1000UF H 25V DC
C931, C951	9A06693200	CE, 100UF H 16V DC
C961	9A06696200	CQ, 0.047UF J 50V
C962, C966	9A06693200	CE, 100UF H 16V DC
C991, C992	9A06695500	CQ, 0.0010UF J 50V
D505, D506	9A05193600	DIODE, ZENER MTZJ15BT
D543, D546	9A01390500	DIODE, 1N4148MT
D901	9A05353100	DIODE, BRIDGE PBPC604F
D902	9A05987000	DIODE, BRIDGE W02GF
D931, D951	9A06765200	DIODE, MEZJ13BT

ELECTRICAL PARTS LIST

Ref. No.	Part No.	Description
D961	9A01390500	DIODE, 1N4148MT
ET01	9A05333900	PLATE, EARTH
F901	9A05353400	FUSE F1.6A
IC61	9A05341500	IC, KA7805-ABTU
JK51	9A06677000	TERMINAL SP
JK52	9A06864000	JACK, BOARD
JW91, JW92	9A06867600	WIRE ASS'Y
L537, L538	9A04875100	COIL, DC-D2100
OL66	9A06861900	OUTLET, AC(1P)
PW91	9A05329300	WAFER MOLEX 5267-04A
PW92	9A05329100	WAFER MOLEX 5267-03A
PW93	9A06674400	WAFER
PW94	9A06867400	WIRE ASS'Y
Q491, Q492	9A05896000	TR., KTC28788
Q501, Q502	9A05341600	TR, KSA992-FTA
Q503, Q504	9A05341600	TR, KSA992-FTA
Q513, Q514	9A03745000	TR, KSC2785-YTA
Q515, Q516	9A03745000	TR, KSC2785-YTA
Q517, Q518	9A06676000	TR KTD2058Y
Q529, Q530	9A05196800	TR, KSC2316-Y-SHTA
Q531, Q532	9A05196700	TR, KSA916-Y-SHTA
Q533, Q534	9A05359800	TR, KTD9980
Q535, Q536	9A05359700	TR, KTB7780
Q541, Q542	9A03745100	TR, KSA1175-YTA
Q545	9A03745200	TR, KSR2206TA
Q903	9A03745000	TR, KSC2785-YTA
Q904, Q905	9A03745100	TR, KSA1175-YTA
Q907, Q942	9A05196700	TR, KSA916-Y-SHTA
Q908, Q932	9A05196800	TR, KSC2316-Y-SHTA
Q931, Q943	9A03745200	TR, KSR2206TA
Q961	9A03745200	TR, KSR2206TA
Q933, Q941	9A05196900	TR, KSR1206TA
Q962	9A05196900	TR, KSR1206TA
RY51	9A04879000	RELAY, OSA-SS-212DM3
R531, R532	9A06234600	RES, METAL OXIDE FILM
R533, R536	9A06062000	R, CEMENT 0.27 2W
R537, R538	9A05896400	R., 4.7-OHM, 1W
R761, R762	9A05338200	R, METAL OXIDE FILM 1W 390
R921, R922	9A06760900	R, FUSE 0.47 J 1W
R961	9A06865900	RES, METAL OXIDE FLIM
TW91	9A06538200	WAFER SYFW800-02P